Dart Aerospace Ltd.

Date: Monday, 18/08/2008 10:26:57 AM
User: Julie Lecocq

Process Sheet

SPLIT - 2

Customer	: CU-DAR001 Dart Helicopters Services	**Drawing Name**	: ARM
Job Number	: 41288		
Estimate Number	: 12884		
P.O. Number	:	**Part Number**	: D3560044
This Issue	: 18/08/2008 **S.O. No.** :	**Drawing Number**	: D3560 REV D
Prsht Rev.	: NC	**Project Number**	: N/A
First Issue	: / / **Type** : MACHINED PARTS	**Drawing Revision**	: D
Previous Run	: 36421	**Material**	:
Written By	:	**Due Date**	: 10/09/2008 **Qty:** ~~10~~ **Um:** Each
Checked & Approved By	: JLD 08.8.18		

Comment : Est Rev:A New Issue 07.05.24 EC
Est Rev B ECN 987 07.10.09 EC verified by DD
Est Rev:C ECN1048 07-12-18 DD veriffied by: EC

Additional Product

Job Number:

Seq. #:	Machine Or Operation:	Description :
1.0	M6061T6B0500X05000	6061-T6 Bar .500 x 5.00

Comment: Qty.: 1.3598 f(s)/Unit Total : 13.5975 f(s)
6061-T6 Bar 0.50" x 5.00" M108854 x4
Batch: M109025X6
JL 08/08/25

2.0	BAND SAW	BAND SAW

Comment: BAND SAW
Cut blanks 15.500" long
JL 08/09/22

3.0	HAAS1	HAAS CNC VERTICAL MACHINING #1

(PH)

Comment: HAAS CNC VERTICAL MACHINING #1

1- Mill as per Folio FA696 Rev: AA & Dwg D3560 Rev: D

2-C'sink 0.196" hole on manual mill as per dwg D3560

3-Deburr per dwg D3560
DJP 08/08/27

4.0	QC2	INSPECT PARTS AS THEY COME OFF MACHINE

Comment: INSPECT PARTS AS THEY COME OFF MACHINE
08-08-27
(10)

Form: rprocess

Dart Aerospace Ltd

W/O:		WORK ORDER CHANGES					
DATE	STEP	PROCEDURE CHANGE	By	Date	Qty	Approval Chief Eng / Prod Mgr	Approval QC Inspector

Part No: D3560 044 D3562-042 D412-630-034 PAR #: N/A Fault Category: Prod/Machined Parts NCR: (Yes) No DQA: D Date: 08/09/22

QA: N/C Closed: D Date: 08/09/22

NCR: H1288

WORK ORDER NON-CONFORMANCE (NCR)

DATE	STEP	Description of NC Section A	Corrective Action Section B: Initial Chief Eng	Action Description Chief Eng	Sign & Date	Verification Section C	Approval Chief Eng	Approval QC Inspector
8/8/27	# 30	one (1) parts has hole DIA at 0.510 instead of 0.507" +0.000 -0.001" and C Bore at 0.235" instead of 0.250" +.000 R.C machine malfunction #ANS # forgot its zero	~~RH~~ QSI 08/08/27 RSXUL	Recommend scrap b/c press fit w/D2707 spacer won't work Replace B# 109205	DJP 08/08/27	08/08/27 RSXUL		08/08/27
8/8/27	# 30	One part C Bore of 0.507" is over by .008" ~~Machinist fault~~ RL ~~machinist~~ machined made ~~keying error~~ keying error	RSXUL	Scrap and replace B# 109205	DJP 08/08/27	08/08/27	RSXUL	08/08/27

NOTE: Date & initial all entries

H:\FORMS\Quality Assurance\approved QA\NCRWO RevD

Date: Monday, 18/08/2008 10:26:57 AM
User: Julie Lecocq

Process Sheet

Customer: CU-DAR001 Dart Helicopters Services **Drawing Name:** ARM

Job Number: 41288 **Part Number:** D3560044

Job Number:

Seq. #:	Machine Or Operation:	Description :
5.0	QC8	SECOND CHECK

Comment: SECOND CHECK

SA 06/09/02 (10)

6.0	D35921	Plate

Comment: Qty.: 1.0000 Each(s)/Unit Total : 10.0000 Each(s)
PLATE 3 41083 ✓ SP 08.09.09 (3x)

7.0	LARGE FAB 1	LARGE FABRICATION RESOURCE 1

Comment: LARGE FABRICATION RESOURCE 1

1-Weld assembly as per dwg D3560

STEP:
1- clean material (buff bracket and bottom of arm with blue pad) SP
2- set up bracket and arm on jig SP
3- preheat bracket and arm with torch SP
4- clean before welding with brush SP
5- set up machine to 135 amps SP
6- weld across bottom and top ends SP
7- reheat with torch (65 deg C) SP
8- on one side weld from bottom to top half way SP
9- same for other side (half way) SP
10- from half way point weld the rest of the first side (ease off pedal near end) SP
11- same for remaining side (ease off pedal near end) SP

PTO

08-09-09 (3x)

8.0	QC5	INSPECT WORK TO CURRENT STEP

Comment: INSPECT WORK TO CURRENT STEP

08/09/17 (12)

9.0	QC9	VISUAL WELDING INSPECTION

Comment: VISUAL WELDING INSPECTION

PD 03-09-10 (2)

Form: rprocess

Dart Aerospace Ltd

W/O:		WORK ORDER CHANGES					
DATE	STEP	PROCEDURE CHANGE	By	Date	Qty	Approval Chief Eng / Prod Mgr	Approval QC Inspector

Part No: D3560-044 PAR #: _____ Fault Category: Prod/machined Parts NCR: Yes (No) DQA: D Date: 08/09/22

CAR-08-026. QA: N/C Closed: D Date: 08/09/22

NCR: 41288		WORK ORDER NON-CONFORMANCE (NCR)						
DATE	STEP	Description of NC Section A	Corrective Action Section B: Initial Chief Eng	Action Description Chief Eng	Sign & Date	Verification Section C	Approval Chief Eng	Approval QC Inspector
8/9/10	7-D	During welding inspection Qty (ED) Arm was found with a crack in the D3592-1 plate from welding	08/09/15	Scrap and Destroy and no replace Qty (ED) As per Email from David Shepherd to Alan Stocks on 8/9/10 @ 1:36 pm	SAD 08/09/17	08/09/17	08/09/15	08/09/10
		RC: Grain runs along the weld.		See CAR 08-026	08.09.11			08/09/10

NOTE: Date & initial all entries

H:\FORMS\Quality Assurance\approved QA\NCRWO RevD

Date: Monday, 18/08/2008 10:26:57 AM
User: Julie Lecocq

Process Sheet

Customer: CU-DAR001 Dart Helicopters Services **Drawing Name:** ARM

Job Number: 41288 **Part Number:** D3560044

Job Number:

Seq. #:	Machine Or Operation:	Description :
10.0	HAND FINISHING1	HAND FINISHING RESOURCE #1
	Comment: HAND FINISHING RESOURCE #1 Chemical Conversion Coat as per QSI 005 4.1	M-L 08/09/17 (2X)
11.0	QC3	INSPECT POWDER COAT/CHEMICAL CONVERSION
	Comment: INSPECT POWDER COAT/CHEMICAL CONVERSION	08-09-17 (2X)
12.0	D2808	Bushing
	Comment: Qty.: 1.0000 Each(s)/Unit Total : 10.0000 Each(s) Spacer batch: B37113	08/09/18
13.0	SMALL FAB 1	SMALL & MEDIUM FAB RESOURCE 1
	Comment: SMALL & MEDIUM FAB RESOURCE 1 1-Press bushing in D3560 arm per dwg D3562	08/09/18 (2)
14.0	QC5	INSPECT WORK TO CURRENT STEP
	Comment: INSPECT WORK TO CURRENT STEP	08/09/18 (x2)
15.0	PACKAGING 1	PACKAGING RESOURCE #1
	Comment: PACKAGING RESOURCE #1 Identify and Stock Location: 152	8/9/18 (x2) 50
16.0	QC21	FINAL INSPECTION/W/O RELEASE
	Comment: FINAL INSPECTION/W/O RELEASE	08/09/19

Job Completion

MF 08-09-19

Form: rprocess

Dart Aerospace Ltd

W/O:		WORK ORDER CHANGES					
DATE	STEP	PROCEDURE CHANGE	By	Date	Qty	Approval Chief Eng / Prod Mgr	Approval QC Inspector

Part No: _____ PAR #: _____ Fault Category: _____ NCR: Yes No DQA: _____ Date: _____

QA: N/C Closed: _____ Date: _____

NCR:		WORK ORDER NON-CONFORMANCE (NCR)						
DATE	STEP	Description of NC Section A	Corrective Action Section B			Verification Section C	Approval Chief Eng	Approval QC Inspector
			Initial Chief Eng	Action Description Chief Eng	Sign & Date			

NOTE: Date & initial all entries

RELEASED 07.12.12

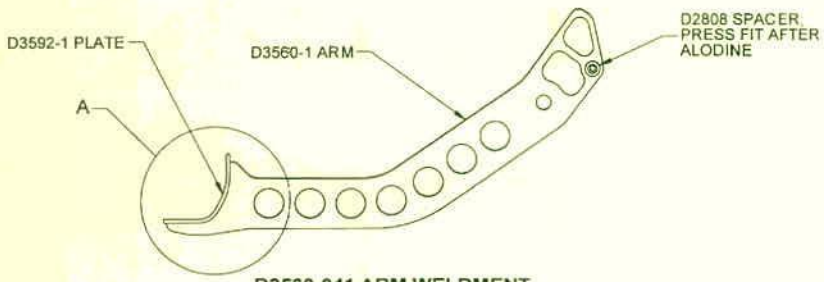

D3560-041 ARM WELDMENT

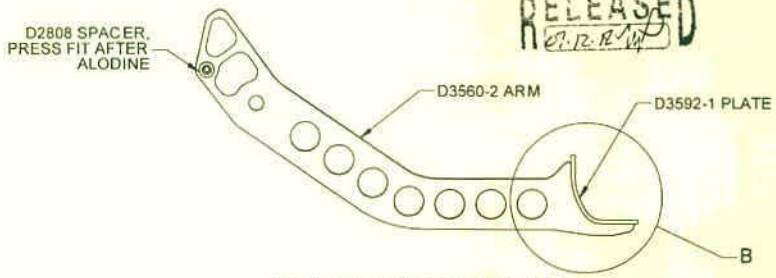

D3560-042 ARM WELDMENT

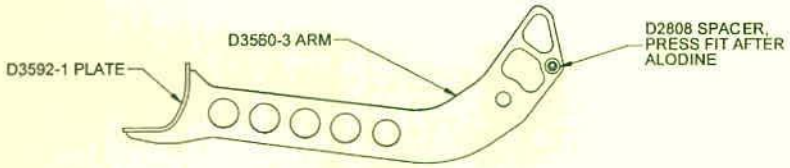

D3560-043 ARM WELDMENT

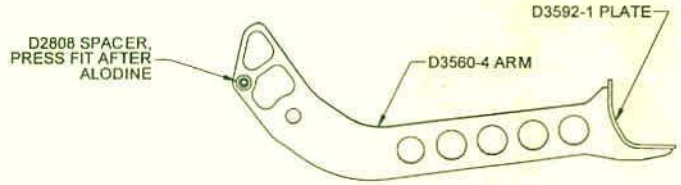

D3560-044 ARM WELDMENT

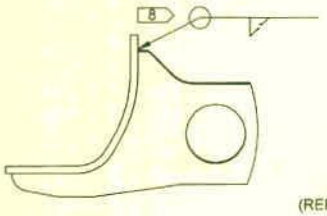

DETAIL A
SCALE 1 : 2

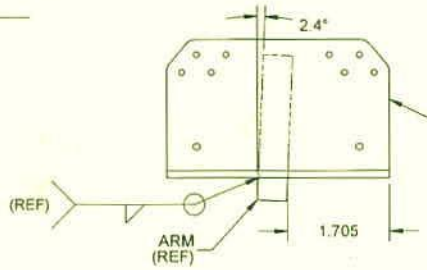

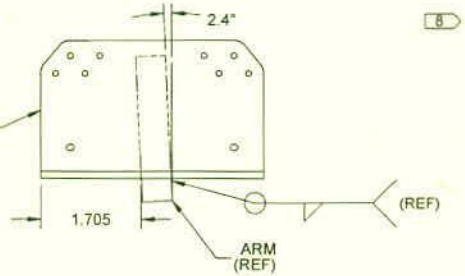

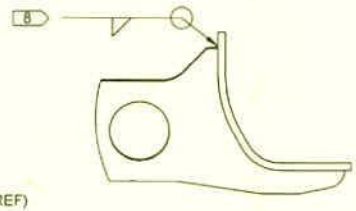

DETAIL B
SCALE 1 : 2

PARTS LIST

QTY -041	QTY -042	QTY -043	QTY -044	P/N	DESCRIPTION
X				D3560-041	ARM WELDMENT
	X			D3560-042	ARM WELDMENT
		X		D3560-043	ARM WELDMENT
			X	D3560-044	ARM WELDMENT
1	1	1	1	D2808	SPACER
1				D3560-1	ARM
	1			D3560-2	ARM
		1		D3560-3	ARM
			1	D3560-4	ARM
1	1	1	1	D3592-1	PLATE

NOTES:
1) MATERIAL: N/A
2) FINISH: CHEMICAL CONVERSION COAT PER DART QSI 005 4.1
3) TOLERANCES: PER DART QSI 018 UNLESS OTHERWISE NOTED
4) UNITS: INCHES UNLESS OTHERWISE NOTED
5) BREAK SHARP EDGES: 0.005 TO 0.015 MAX
6) IDENTIFICATION: N/A
7) WEIGHT: 1.23 lbs (TYP)
8) WELDING: PER DART QSI 004

REV.	DESCRIPTION	BY	DATE
D	ADD D2808 PRESS FIT NOTE; REDRAWN IN SOLIDWORKS	DC	07.11.16
C	REMOVE POWDER COAT	CP	07.06.19
B	REDESIGN AS WELDMENT, ADD POCKETS	CP	07.01.15
A	NEW ISSUE	CP	06.09.25

DESIGN		DART AEROSPACE LTD HAWKESBURY, ONTARIO, CANADA
DRAWN	DC	
CHECKED		DRAWING NO. D3560 — REV. D — SHEET 1 OF 5
MFG. APPR.		
APPROVED		TITLE: ARM WELDMENT — SCALE 1:4
DE APPR.		
DATE	07.11.16	

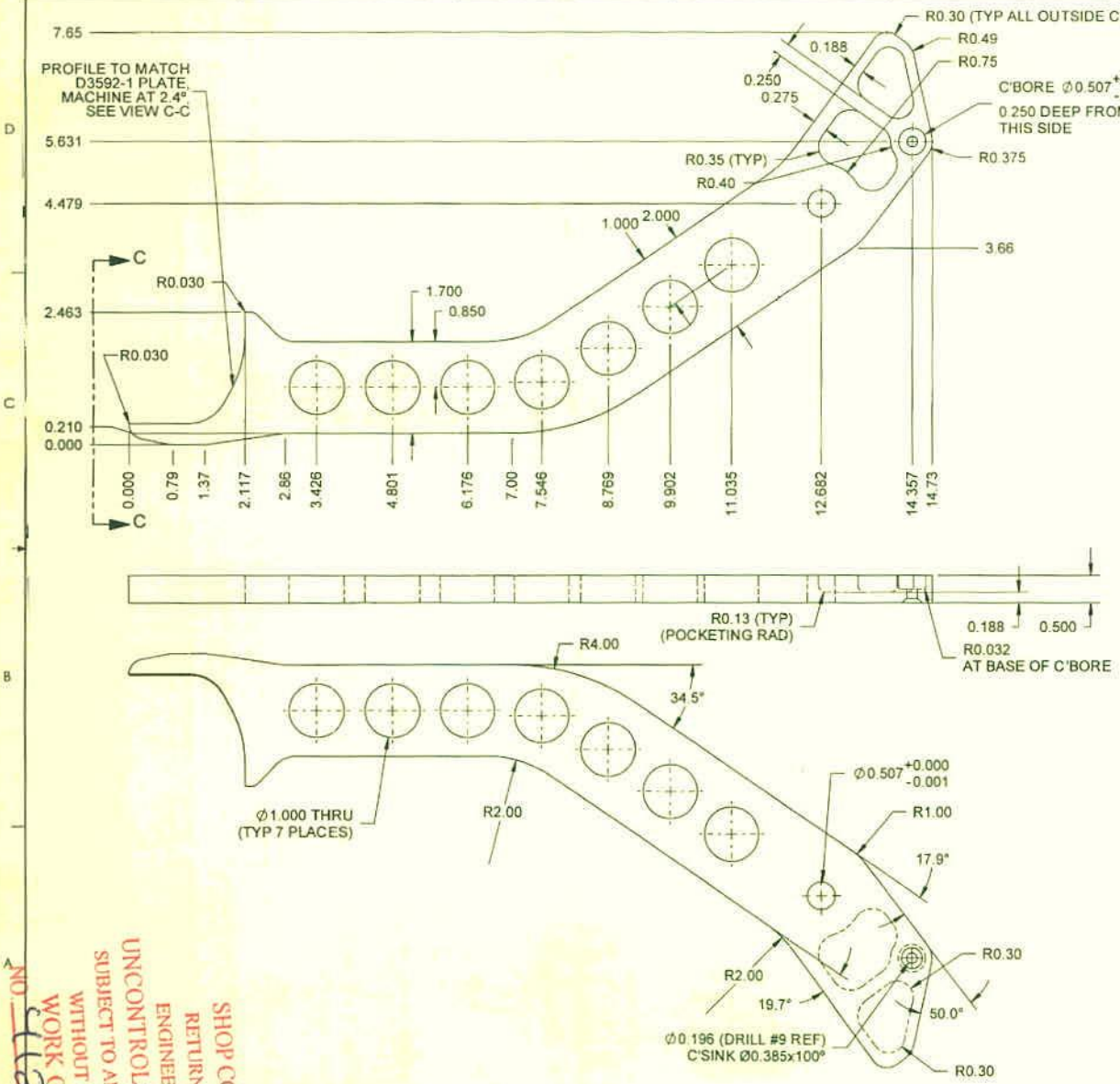

D3560-1 ARM WELDMENT

NOTES:
1) MATERIAL: 6061-T6 (OR 6061-T651/T6510/T6511/T62) BAR, 0.500 THICK PER AMS-QQ-A-225/8 (OR AMS 4117/4128/4115/4116) OR PER AMS-QQ-A-200/8 (OR AMS 4160) (REF. DART SPEC. M6061T6B0.500)
2) FINISH: NONE
3) TOLERANCES: PER DART QSI 018 UNLESS OTHERWISE NOTED
4) UNITS: INCHES UNLESS OTHERWISE NOTED
5) BREAK SHARP EDGES: 0.005 TO 0.015 MAX
6) IDENTIFICATION: N/A
7) WEIGHT: 1.05 lbs

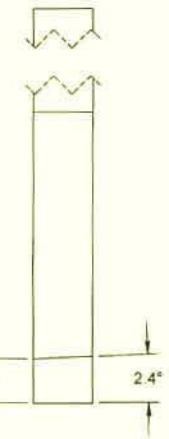

VIEW C-C
SCALE 1 : 1

RELEASED 07.12.16

DESIGN		DART AEROSPACE LTD HAWKESBURY, ONTARIO, CANADA
DRAWN		
CHECKED		DRAWING NO. D3560 — REV. D — SHEET 2 OF 5
MFG. APPR.		
APPROVED		TITLE: ARM WELDMENT — SCALE 1:2
DE APPR.		
DATE	07.11.16	

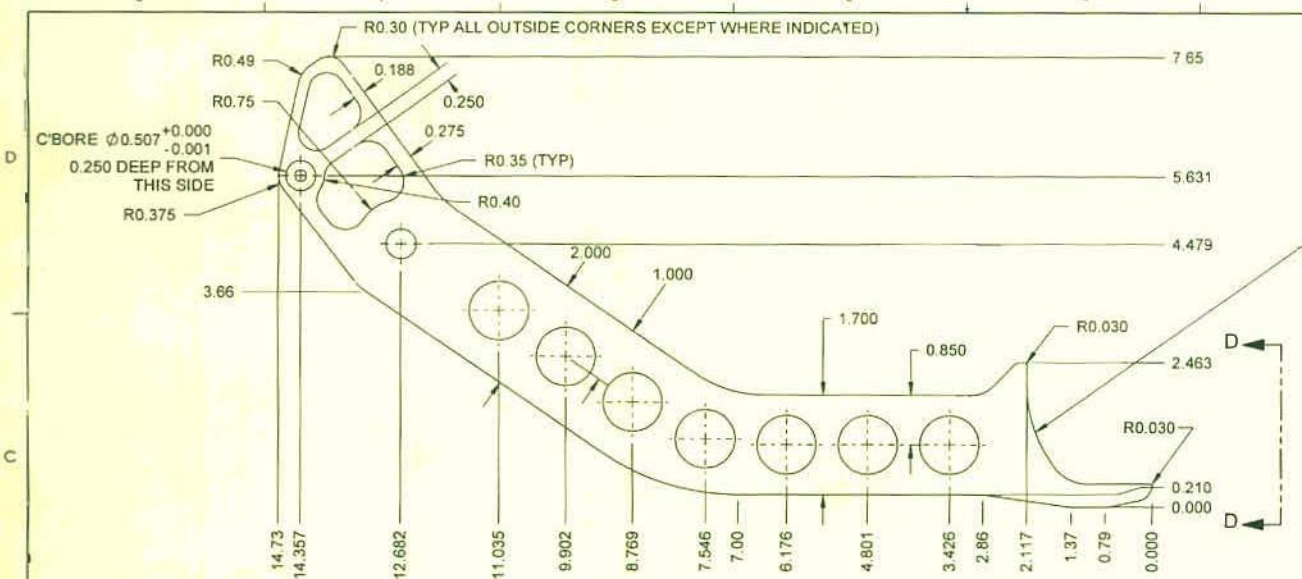

PROFILE TO MATCH D3592-1 PLATE, MACHINE AT 2.4°, SEE VIEW D-D

RELEASED 07-12-12

D3560-2 ARM

NOTES:
1) MATERIAL: 6061-T6 (OR 6061-T651/T6510/T6511/T62) BAR, 0.500 THICK PER AMS-QQ-A-225/8 (OR AMS 4117/4128/4115/4116) OR PER AMS-QQ-A-200/8 (OR AMS 4160) (REF. DART SPEC. M6061T6B0.500)
2) FINISH: NONE
3) TOLERANCES: PER DART QSI 018 UNLESS OTHERWISE NOTED
4) UNITS: INCHES UNLESS OTHERWISE NOTED
5) BREAK SHARP EDGES: 0.005 TO 0.015 MAX
6) IDENTIFICATION: N/A
7) WEIGHT: 1.05 lbs

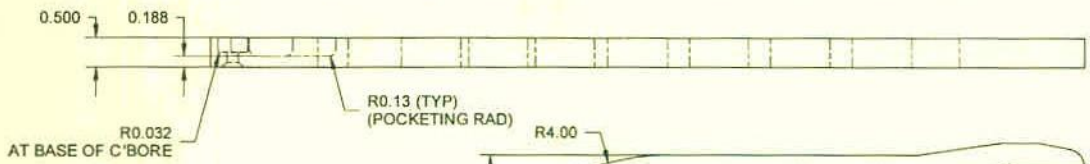

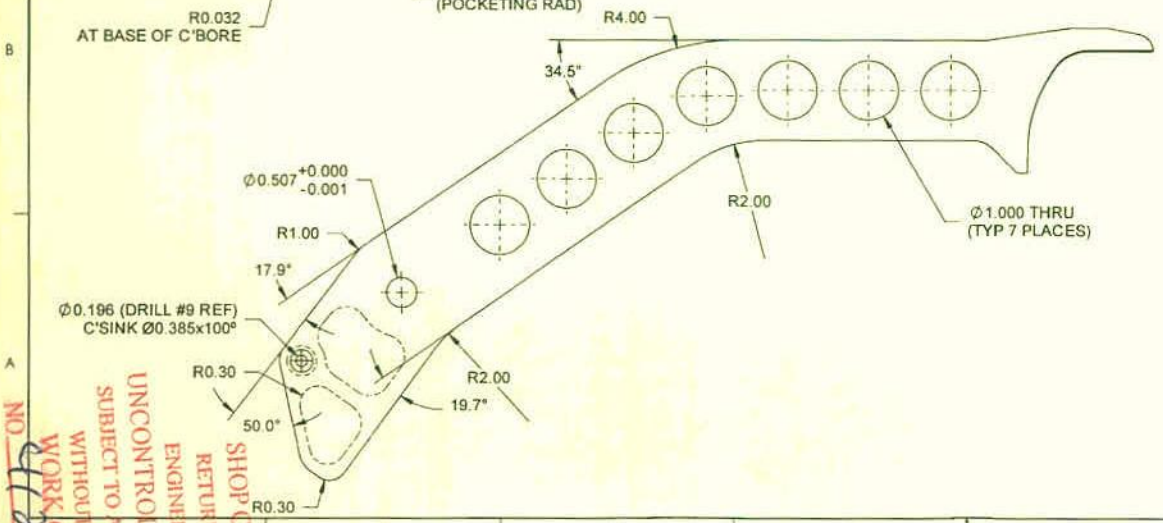

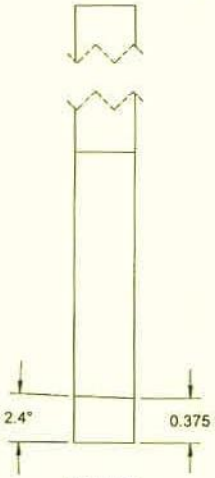

VIEW D-D
SCALE 1 : 1

DESIGN		DART AEROSPACE LTD HAWKESBURY, ONTARIO, CANADA
DRAWN		
CHECKED		DRAWING NO. D3560 — REV. D — SHEET 3 OF 5
MFG. APPR.		
APPROVED		TITLE: ARM WELDMENT — SCALE 1:2
DE APPR.		
DATE	07.11.16	

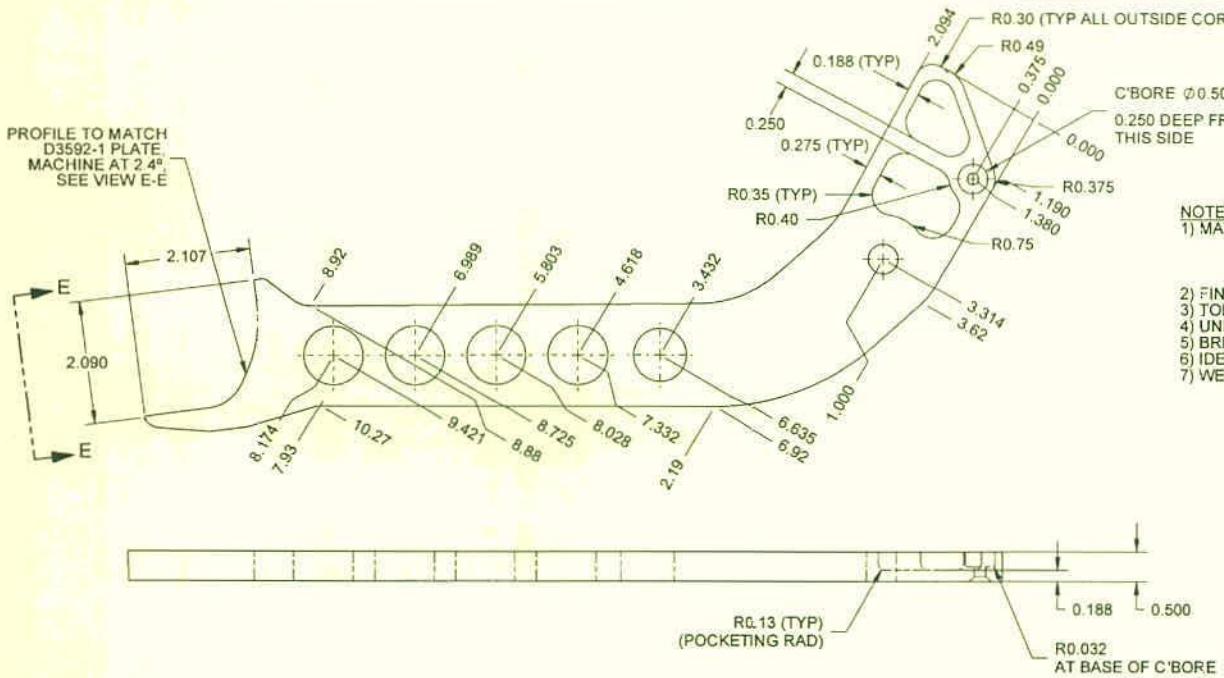

D3560-3 ARM

NOTES:
1) MATERIAL: 6061-T6 (OR 6061-T651/T6510/T6511/T62) BAR, 0.500 THICK PER AMS-QQ-A-225/8 (OR AMS 4117/4128/4115/4116) OR PER AMS-QQ-A-200/8 (OR AMS 4160) (REF. DART SPEC. M6061T6B0.500)
2) FINISH: NONE
3) TOLERANCES: PER DART QSI 018 UNLESS OTHERWISE NOTED
4) UNITS: INCHES UNLESS OTHERWISE NOTED
5) BREAK SHARP EDGES: 0.005 TO 0.015 MAX
6) IDENTIFICATION: N/A
7) WEIGHT: 1.05 lbs

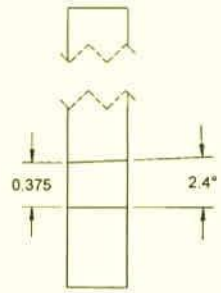

VIEW E-E
SCALE 1 : 1

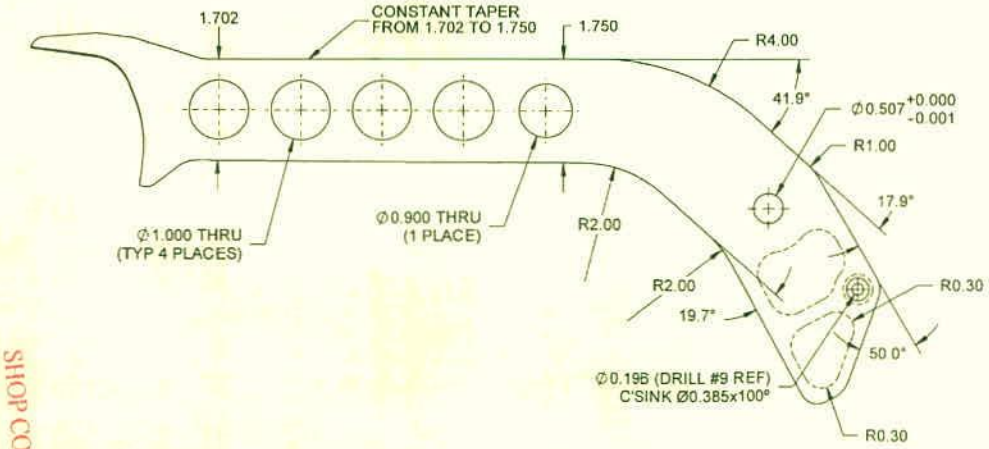

RELEASED 07.12.14

DESIGN		**DART AEROSPACE LTD** HAWKESBURY, ONTARIO, CANADA
DRAWN		DRAWING NO. D3560 — REV. D — SHEET 4 OF 5
CHECKED		TITLE ARM WELDMENT — SCALE 1:2
MFG. APPR.		
APPROVED		
DE APPR.		
DATE	07.11.16	

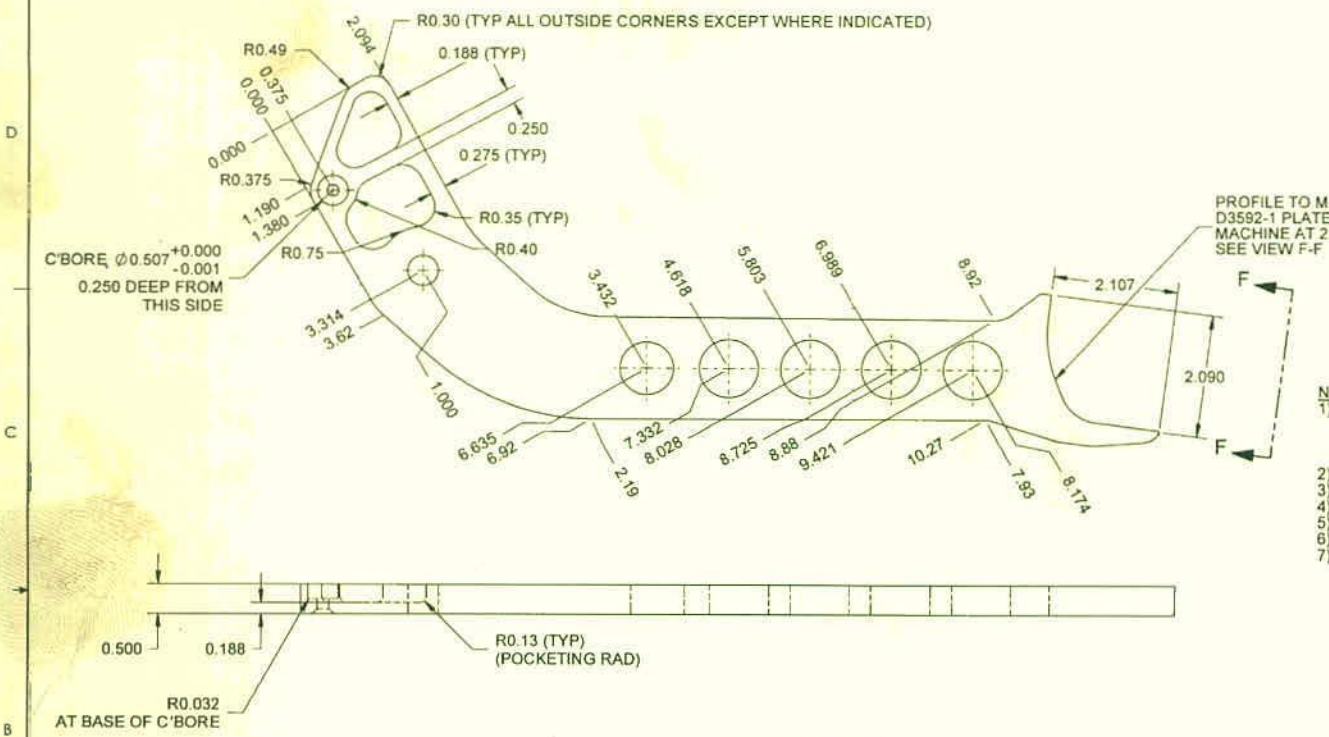

D3560-4 ARM

NOTES:
1) MATERIAL: 6061-T6 (OR 6061-T651/T6510/T6511/T62) BAR, 0.500 THICK PER AMS-QQ-A-225/8 (OR AMS 4117/4128/4115/4116) OR PER AMS-QQ-A-200/8 (OR AMS 4160) (REF. DART SPEC. M6061T6B0.500)
2) FINISH: NONE
3) TOLERANCES: PER DART QSI 018 UNLESS OTHERWISE NOTED
4) UNITS: INCHES UNLESS OTHERWISE NOTED
5) BREAK SHARP EDGES: 0.005 TO 0.015 MAX
6) IDENTIFICATION: N/A
7) WEIGHT: 1.05 lbs

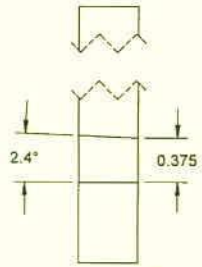

VIEW F-F
SCALE 1 : 1

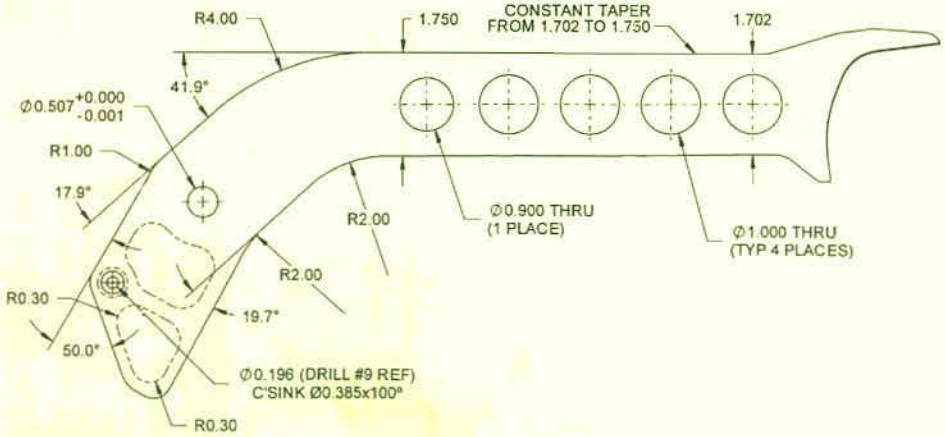

DESIGN	PC	**DART AEROSPACE LTD** HAWKESBURY, ONTARIO, CANADA
DRAWN	BC	DRAWING NO. D3560 — REV. D — SHEET 5 OF 5
CHECKED		TITLE: ARM WELDMENT — SCALE 12
MFG. APPR.		
APPROVED		
DE APPR.		
DATE	07.11.16	

DART AEROSPACE LTD	Work Order:	41288
Description: Arm	Part Number:	D3560-4
Inspection Dwg: D3560 Rev: B		Page 1 of 1

FIRST ARTICLE INSPECTION CHECKLIST

[X] First Article [ ] Prototype

Drawing Dimension	Tolerance	Actual Dimension	Accept	Reject	Method of Inspection	Comments
Ø0.507	+0.000/-0.001	0.506	✓			
Ø0.196	+0.005/-0.001	0.198	✓			
Ø1.000	+0.010/-0.001	1.008	✓			
Ø0.900	+0.010/-0.001	0.902	✓			
0.500	+/-0.010	0.490	✓			
0.250	+/-0.010	0.248	✓			
0.275	+/-0.010	0.272	✓			
0.188	+/-0.010	0.190				
2.000	+/-0.010	N/A	08.08.27.			
1.750	+/-0.010	1.754	✓			
1.702	+/-0.010	1.704	✓			
Ø0.385 x 100°	+/-0.010 x 0.5°	.380x108				
0.250 Deep	+/-0.010	0.240	✓			

Measured by:	DJP	Audited by:		Prototype Approval:	N/A
Date:	08/08/27	Date:	08/09/02	Date:	N/A

Rev	Date	Change	Revised by	Approved
A	07.01.17	New Issue	KJ/JLM	
B	07.06.13	Dimensions updated per Dwg Rev B	KJ/JLM	

From: David Shepherd [mailto:dshepherd@dartaero.com]
Sent: September 10, 2008 1:36 PM
To: 'Alan Stocker'
Cc: 'Chris Provencal'; 'Mike Petsche'; 'Bill Beckett'; 'Susanne Sheldon'
Subject: RE: D3560-044 & -042 Cracking

Alan,

Thanks for the pictures.
I am not comfortable with any sort of repair to these parts.
I think that all 14 parts should be scrapped.
And, at the risk of stating the obvious, we need to revisit the manufacturing process of this joint.
My preference, as it was a couple of years ago, is to eliminate this weld.
However, the geometry in that area is a little tricky.
Suggest we generate an NCR or PAR or whatever.

David

From: Alan Stocker [mailto:astocker@dartaero.com]
Sent: Wednesday, September 10, 2008 10:26 AM
To: 'David Shepherd'
Cc: 'Chris Provencal'; 'Mike Petsche'
Subject: D3560-044 & -042 Cracking

Good morning,

We have 13x D3560-044 and 1x D3560-042 that have cracks all but 1 in the same location. Attached image D3560-044 Crack 1 shows where 13 of the 14 cracks occurred. D3560-044 Crack 2 shows where the other crack occurred. The cracks shown in D3560-044 Crack 1 vary in depth from roughly 3/32 to ½ inch. I discussed this with Chris and Peter the consensus opinion is the parts are scarp. Further discussion with Chris indicates that changing grain direction to 45 degree on the sheet metal part may lower the scrap rate but not eliminate it. This has been done on a previous deviation with a less scrap. D3560-044 Crack 2 appears to just be an anomaly.

Please disposition all 14 parts.

Regards,

Alan Stocker
Mechanical Designer

Dart Aerospace Ltd.
1270 Aberdeen Street
Hawkesbury, Ontario
CANADA K6A 1K7

Phone: 613 632 5200 x 241
FAX : 1 613 632 5246

astocker@dartaero.com